DS-27RS370 DC SPUR GEAR MOTOR

Main Voltage： 6VDC、12VDC、24VDC

Typical Applications：

Instrument, Electric tools,Coffee machine,
Vending machine, Massager,Game machine,
Electric window opener,Automation equipment

APPEARANCE SIZE

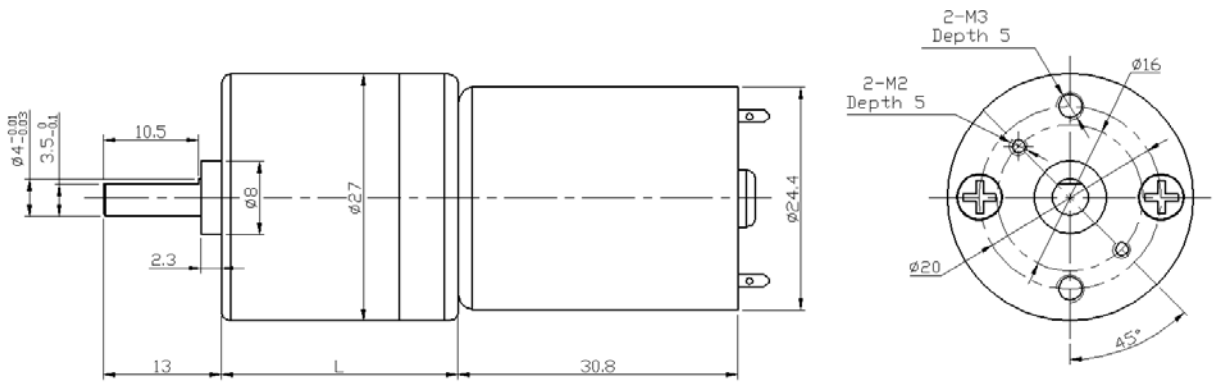

Gearbox Data：

Number of stages	4	5	6	7	8
Reduction ratio	19、27	36、52、76	100、145、210	277、402、583	771、1119、1621
Gearbox length “L”mm	18	20	22	24	26
Breaking torque(kgf.cm)	10	12	14	16	16
Gearbox efficiency	65%	59%	53%	48%	43%

Driving Motor Data：

Motor model	Rated Volt.	No load		Load				Stall	
		Current	Speed	Current	Speed	Torque	Output power	Torque	Current
	V	mA	r/min	mA	r/min	gf.cm	W	gf.cm	mA
DS-370-006-3000	6	≤40	3000	≤160	2500	15	0.4	≥68	≥520
DS-370-006-4500	6	≤56	4500	≤300	3300	25	0.8	≥115	≥860
DS-370-006-6000	6	≤80	6000	≤450	4500	35	1.6	≥165	≥1800
DS-370-012-3000	12	≤20	3000	≤80	2500	15	0.4	≥68	≥250
DS-370-012-4500	12	≤35	4500	≤150	3300	25	0.8	≥115	≥550
DS-370-012-6000	12	≤50	6000	≤220	4500	35	1.6	≥165	≥980

Remark：

Gear Motor Torque=Driving motor torque*Reduction ratio*Gearbox efficiency;
Gear Motor Speed=Driving motor speed/Reduction ratio

Motor detailed config can be customized according to customer's requests,
like voltage,speed,as well as shaft length and shape...

Welcome OEM or ODM projects